DRAWING OF FINISHED PRODUCTS

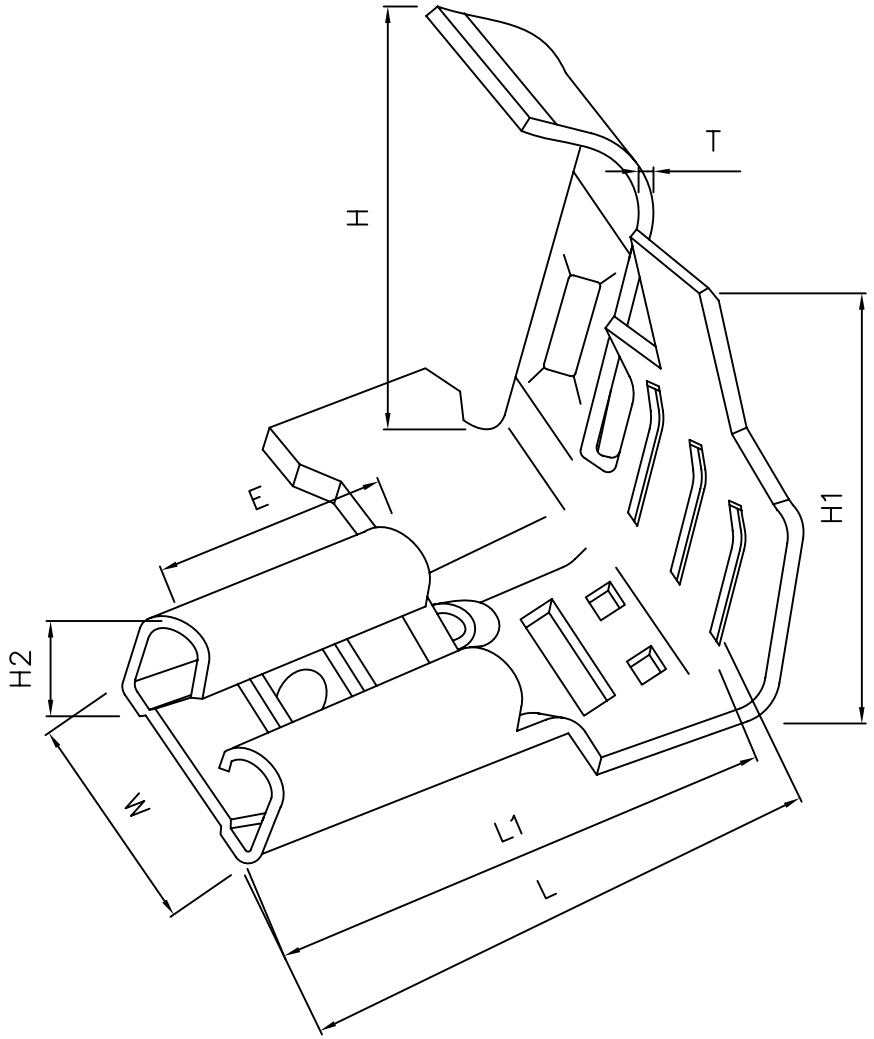

ITEM NO:S2363T-2
MATERIAL:BRASS
THICKNESS:0.45
HARDNESS:SH
PLATING:TIN 40u' MIN
WIRE RANGE:(AWG)14-20
INSULATION O.D.:3.8MAX.
VOL TAGE RATING:AC/250V,DC/350V
CURRENT RATING:AC,DC,15A
TEMPERATURE RANGE:-25°C TO +85°C
MATE:0.8 THICKNESS PIN

DIMENSION:(MM)
T:0.45±0.03
L:16.0±0.35
L1:15.3±0.35
E: 7.85±0.25
W:8.0±0.25
H:11.0±0.25
H1:9.0±0.25
H2:3.1±0.25

Rev	Description/Date	Drawn By: Storm.li	Customer:		Third angle projection		X.± .X±0.40 .XX±0.30 .XXX±
△	Sample/Aug.31.2006	Checked By:Simmon	Part No.:	S2363T-2	General Dimension Tolerance	Units: mm	
△		Approved By: Tony					
SGS Report No.:			Title:	250 Flag Terminal B Type	SOUTH SEA TERMINAL CO.,LTD		