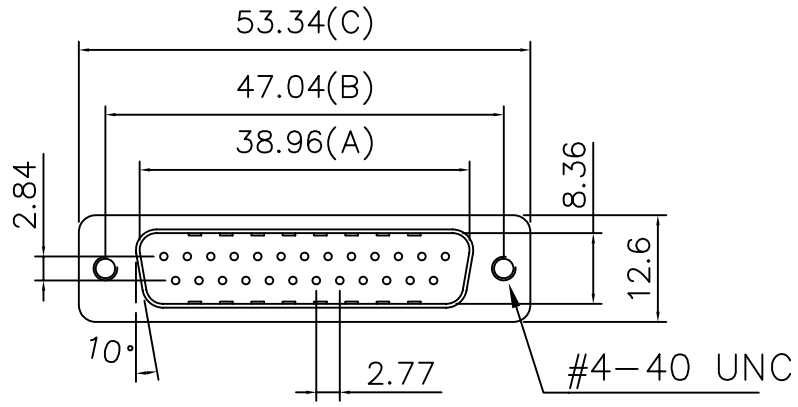

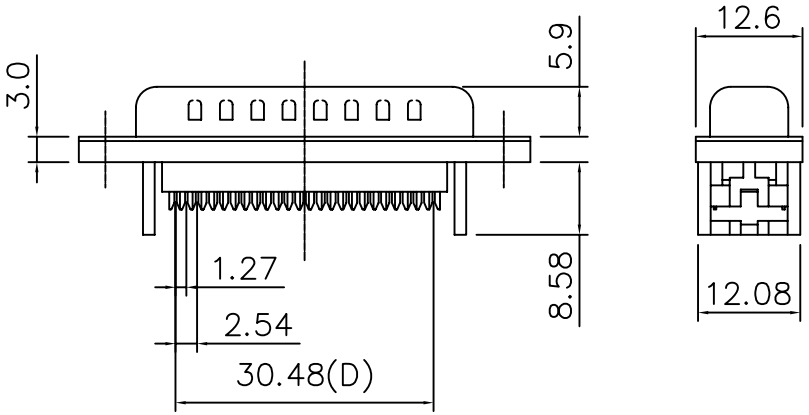

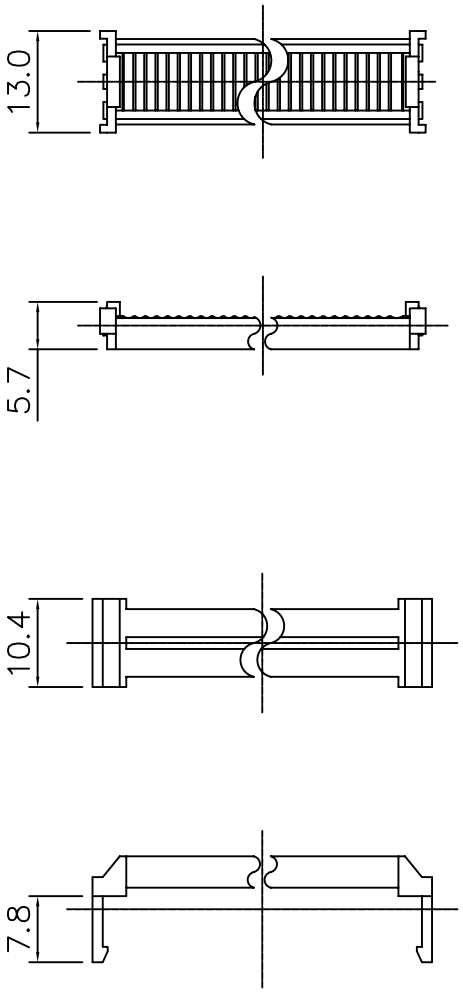

Specifications

Contact Resistance: 30mΩmax. at DC 100mA
Insulator Resistance: 1000MΩmin. at DC 500V
Current Rating: 1 AMP

Dielectric Withstanding
Voltage: AC 500V For 1 minute
Operating Temperature: −55˚~+105˚c
Contact: MALE Brass
FEMALE Phosphor Bronze
Housing: PBT & 30% Glass Fiber (UL 94V−0)

DBIXXPGX−X−X−X−X

- Type
- No of contact
- Male
- Contact: Gold flash
- 1: Blue
- 2: Black
- 1: W/O SR
- 2: W/Metal SR
- 3: W/Plastic SR
- Shell
  - 1: Tin Plated
  - 2: Plastic
- 1: W/O 4x40Unc
- 2: With 4x40Unc
- 1: W/Insulator
- 2: W/O Insulator

Dimension

Positon	A	B	C	D
9	16.92	24.99	31.16	10.16
15	25.50	33.32	39.42	17.78
*25	38.96	47.04	53.34	30.48
37	55.45	63.50	69.68	45.72

Rev	Descripiton/Date	Drawn By: Storm.li	Customer:		Third angle projection	Units: mm
△		Checked By:Simmon	Part No.:	DBIXXPGX−X−X−X−X	General Dimenson Tolerance	.X ±0.1 .XX ±0.05 X. ±0.3
△		Approved By: Tony	Title:	D−SUB IDC MALE TYPE	SOUTH SEA TERMINAL CO.,LTD	
SGS Report No.:						