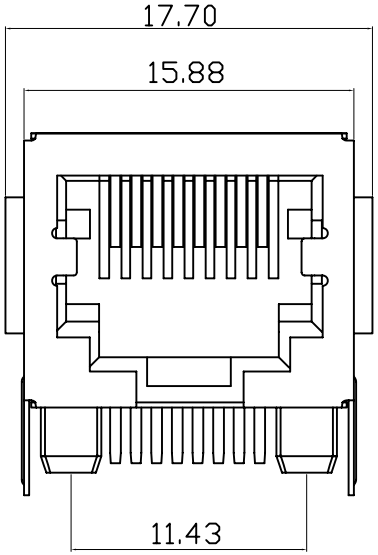

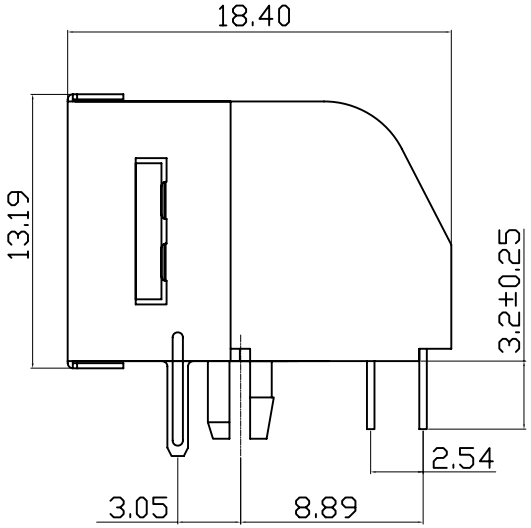

Material
Housing : Glass Filled Polyester (UL94V-0)
Standard Colour : Black
Contact : 0.45mm Dia Phosphor Bronze Gold Plating Over Nickel
Shielded: 0.20mm Thickness Copper Alloy With Tin plated

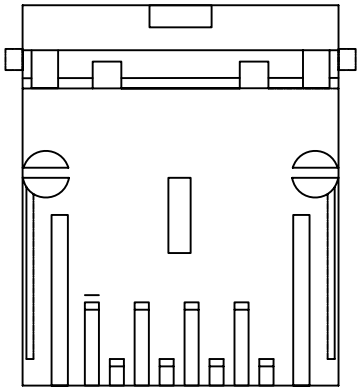

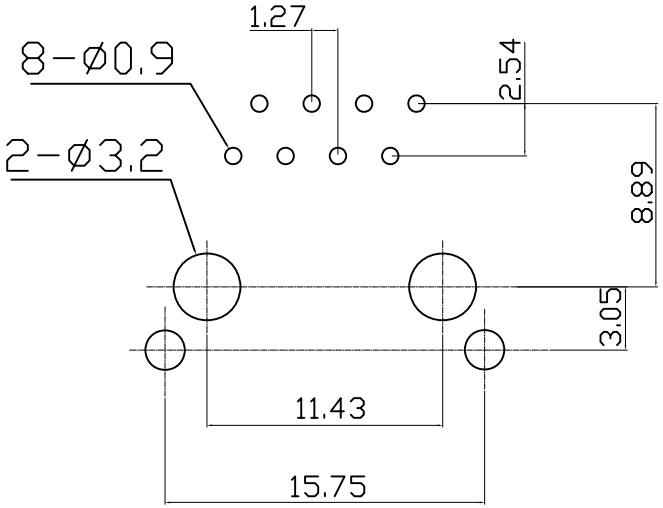

PCB LAYOUT

Rev	Description/Date	Drawn By: Storm Li	Customer:		Third angle projection		Units: mm
△		Checked By:Simmon	Part No.:	8011HS 8P8C	General Dimension Tolerance	TOLERANCE ±0.15MM / ANGLE TOLERANCE±2°	SCALE 2:1
△		Approved By: Tony	Title:	8011 SERIES MODULAR JACK	SOUTH SEA TERMINAL CO.,LTD		
SGS Report No.:							